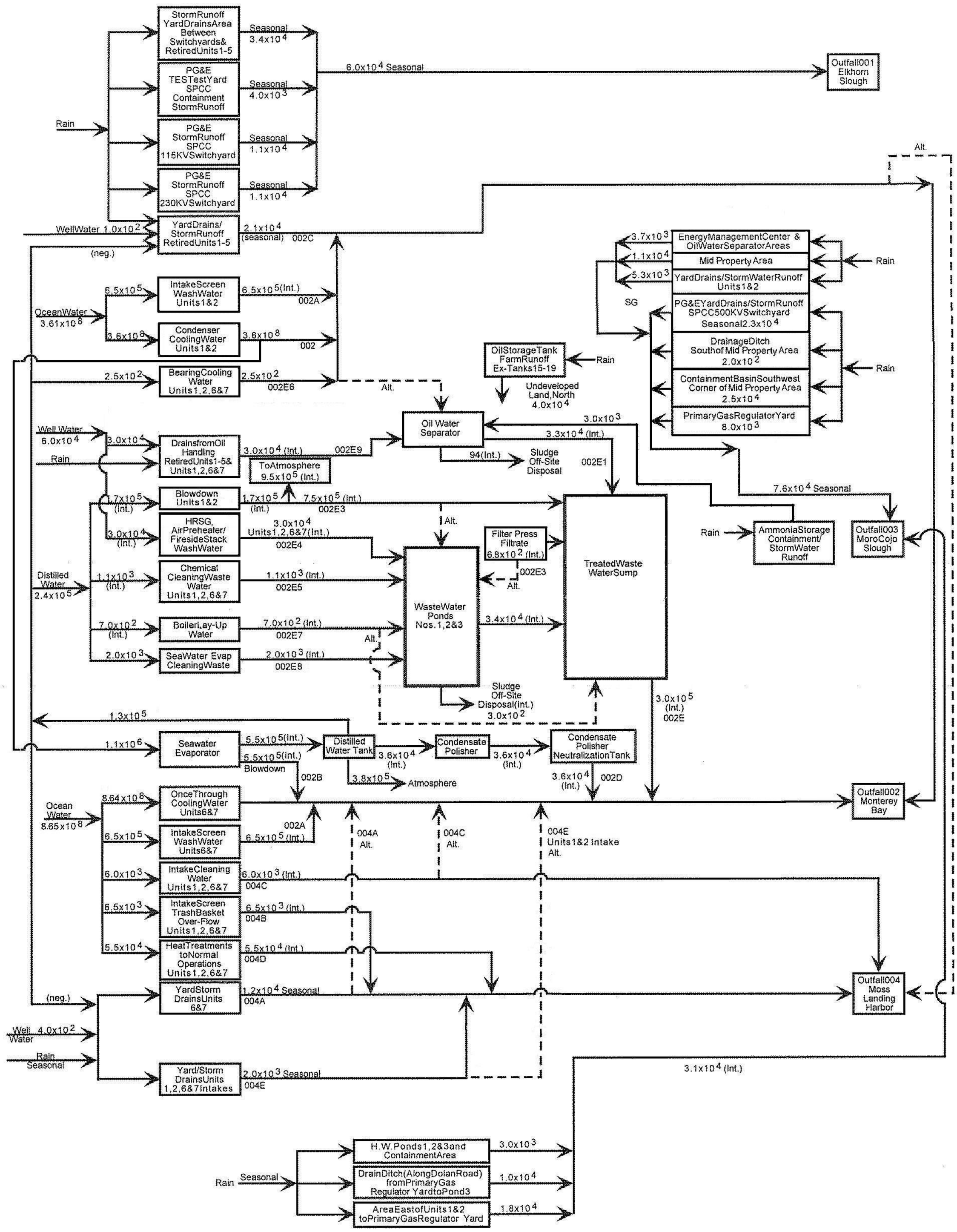

Note: All flows are listed in gallons per day
(Int.) = Intermittant
Alt. – – = Alternate Route
(neg.) = negligible

Figure 2

Water Flow Schematic
Moss Landing Power Plant
Units 1, 2, 6 & 7